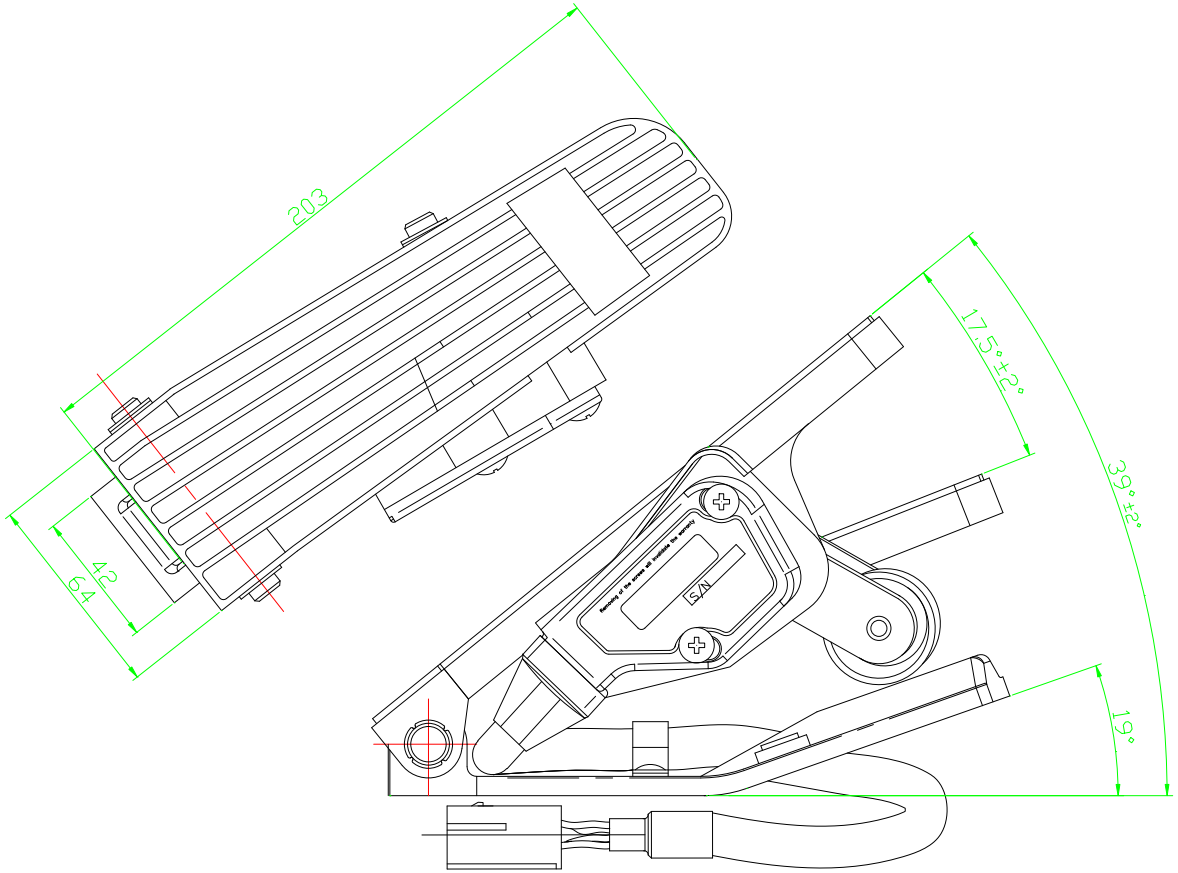

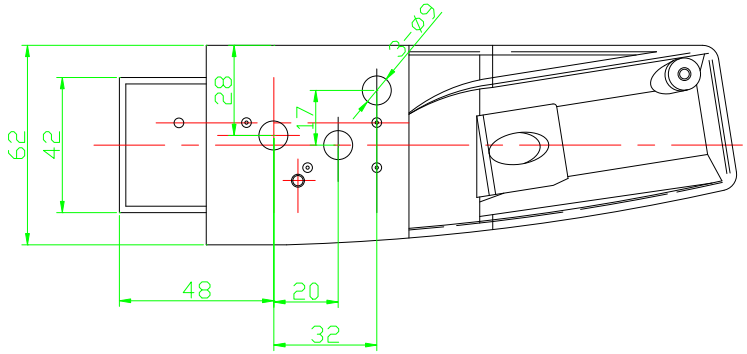

	0-5V pedal For electric car
	Kelly Controls,LLC