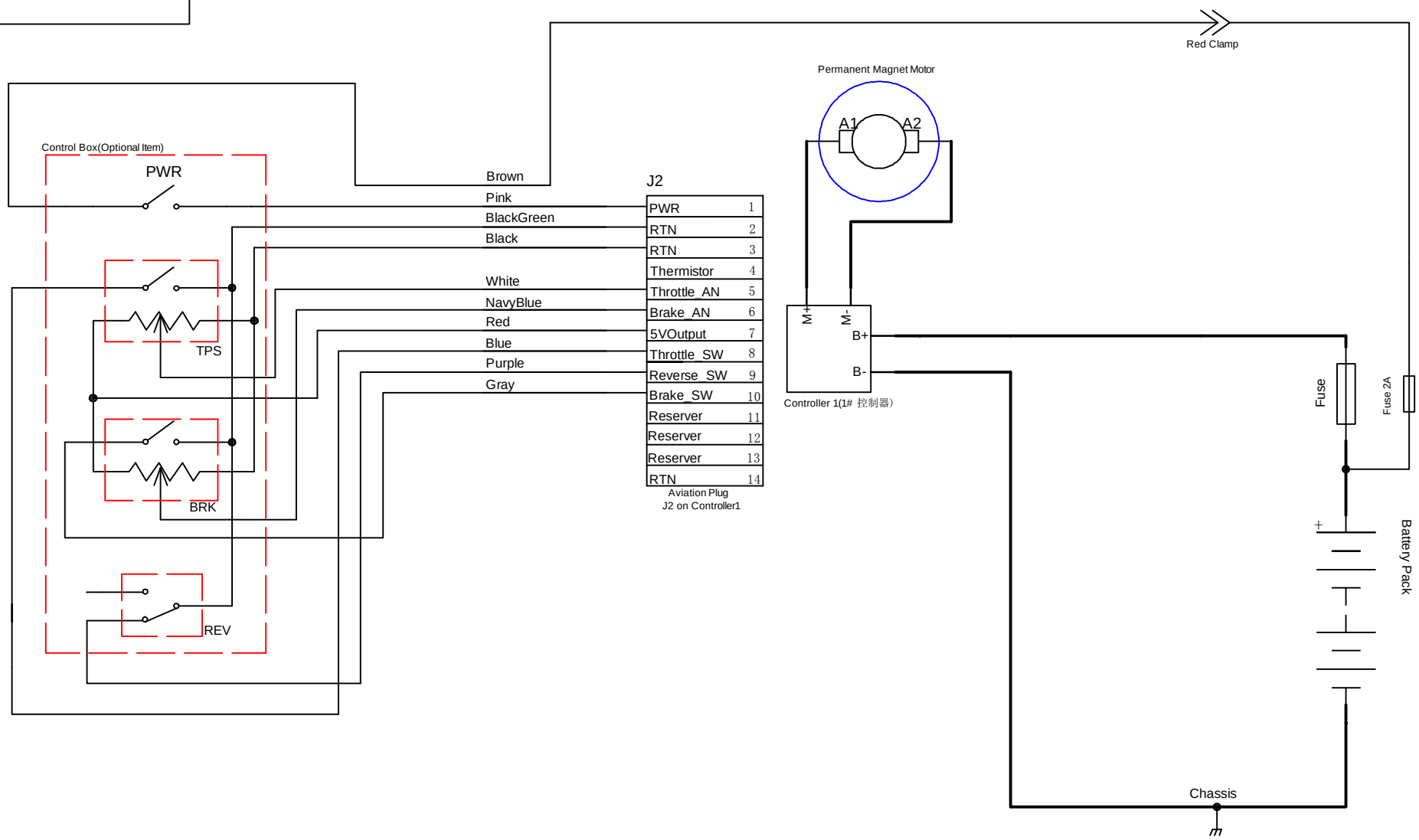

Single Control Box for PM Controller

									KELLY CONTROLS, LLC
Mark		Subarea	Signatory		Date	2010/04/08			
Design			Stand			modification	Number	Proportion	
Assessor									V1.0
Technics			Authorize						
						Sum			